SCHEMATIC OF THE HEATHKIT® PAPER TAPE READER/PUNCH MODEL H10

Part of 595-2020

NOTES:

1. COMPONENT NUMBERS ARE IN THE FOLLOWING GROUPS. 1-99 PARTS MOUNTED ON THE CHASSIS AND MAIN CIRCUIT BOARD, 100-199 PARTS MOUNTED ON THE READER CIRCUIT BOARD.
2. ALL RESISTORS ARE 1/2 WATT UNLESS MARKED OTHERWISE. RESISTOR VALUES ARE IN OHMS (K=1,000; M=1,000,000).
3. ALL CAPACITORS ARE IN µF UNLESS MARKED OTHERWISE.
4. ▽ THIS SYMBOL INDICATES CIRCUIT BOARD GROUND.
5. ⏚ THIS SYMBOL INDICATES CHASSIS GROUND.
6. □ THIS SYMBOL INDICATES WHERE A WIRE IS SOLDERED TO A CIRCUIT BOARD.
7. → THIS SYMBOL INDICATES A CONNECTOR INSIDE CHASSIS PLUG P3.
8. ◐ THIS SYMBOL INDICATES A PART THAT APPEARS TO BE ON A CIRCUIT BOARD BUT IS ACTUALLY MOUNTED ON THE CHASSIS.
9. ⬭ THIS SYMBOL INDICATES A DC VOLTAGE TAKEN WITH A HIGH INPUT IMPEDANCE VOLTMETER FROM THE POINT INDICATED TO CHASSIS GROUND. VOLTAGES MAY VARY ±20%.
10. PARTS IN SHADED AREAS ARE CRITICAL FOR CONTINUED SAFETY. REPLACE THEM ONLY WITH PARTS OF THE SAME RATING OR WITH THE PROPER HEATH PARTS.
11. COPY SWITCH SW4 IS SHOWN IN THE OUT POSITION.
12. * THESE PARTS ARE FOR POSSIBLE FUTURE APPLICATION.
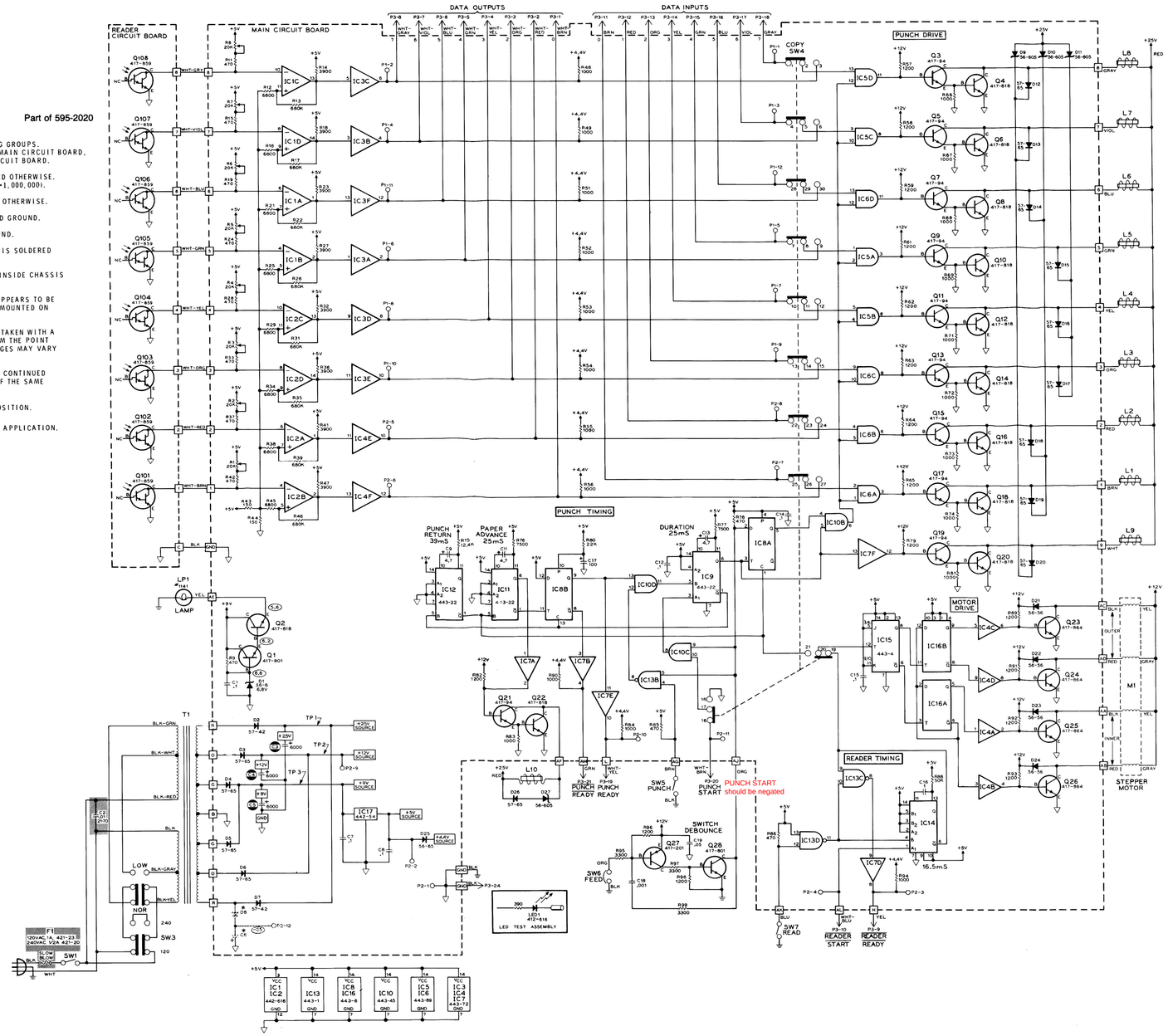
Copyright © 1977
Heath Company
All Rights Reserved
Printed in the United States of America